Multihead weigher with vibratory feeding

CABINPLANT PRODUCT SHEET

Cabinplant multihead weighers are designed to meet the increasing demands of precision and speed during the weighing process with difficult products. The traditional multihead weigher uses vibration to transport and distribute product into the weighing pans. The top cone conveys the product to the vibrator chutes by means of vibration. The vibrator chutes then vibrate the product into the assembling pans by means of time and amplitude control.
The multihead weigher can be divided in up to four separate product zones or can be used for making exact mixes of the chosen products.
Our solutions result in increased capacity and reduced giveaway.

Application

- For difficult and delicate products as well as the easy ones
- Tailor-made design according to customer request
- Special surface for frozen and sticky products

Functionality

- Continuous weighing
- Vibration cones on top
- Vibration dosing time automatically adjusted as a function of partial portion weight
- Rollers can be integrated between the individual channels for handling long products

Advantages

- No giveaway when working with small negative tolerances
- Specially adapted product contact materials for handling of sticky products
- Minimum noise level
- Minimum maintenance
- Easy cleaning
- Wireles operator panel

** Maximum portion size in litres, made from one single weighing, combined from approx. 4 weighing channels per unit. MHW's can be divided in up to 4 units.*
*** No. of units show how many different types of products the MHW can run at the same time.*

Portion size*	Number of weighing channels					
	10	14	18/20	24	28	32
Up to 4 ltr.	10-10	10-14	10-18	10-24	10-28	10-32
Up to 10 ltr.	30-10	30-14	30-20	30-24	30-28	30-32
Up to14 ltr.	40-10	40-14	40-20	40-24		
Up to16 ltr.		50-14		50-24		
No. of units**	1-2	1-2	1-2-3	1-2-3-4	1-2-3-4	1-2-3-4

www.cabinplant.com

Cabinplant

Precise by nature

05.03.01 mbs1036

Technical dimensions

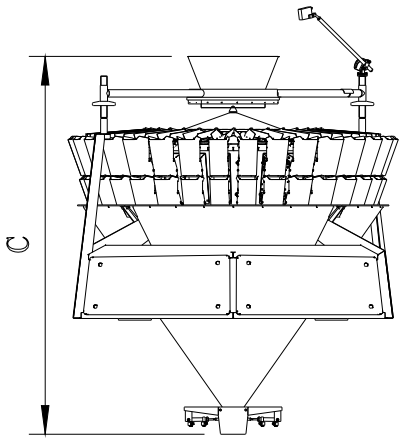

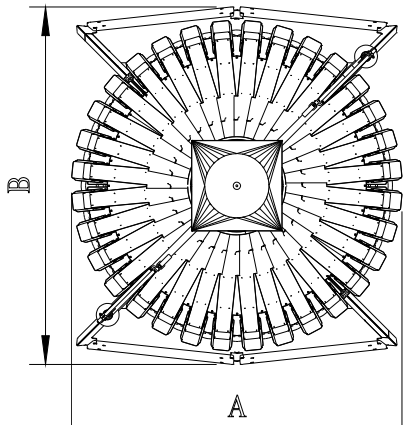

MHW 55° *	Capacity **	A (mm)	B (mm)	C (mm)	Weight (kg)
10-10	20-100	1300	1100	1910	500
10-14	25-125	1460	1220	1950	550
10-18	30-150	1600	1310	2000	650
10-24	40-200	1690	1560	2250	950
10-28	45-225	2000	1840	2400	1150
10-32	50-250	2190	2040	2750	1300
30-10	20-100	1420	1240	1970	500
30-14	25-125	1470	1350	2030	600
30-20	30-150	1700	1630	2350	900
30-24	40-200	1940	1860	2400	1000
30-28	45-225	2180	2100	2430	1100
40-10	20-100	1560	1310	2300	650
40-14	25-125	1760	1580	2400	700
40-20	30-150	1940	1870	2500	1000
40-24	40-200	2190	2180	2880	1100
50-14	25-125	1990	1980	2850	800
50-20	30-150	2460	2460	3000	1300
50-24	40-200	2760	2760	3200	1500

** Assembling and timing hoppers*
*** Portions per minute - the capacity depends on several parameters – e.g. product characteristics*

With a Cabinplant multihead weigher you get a well-proven and reliable weighing machine. Our multihead weighers with vibratory feeding are available in a wide range of models, and we can offer you a machine that meets your specific needs and ensures optimum handling of your product.

In addition, we can offer you turnkey solutions that incorporate various machines into one production line – machines that can also be combined with existing machinery. Our skilled and experienced technicians can train your staff, and last, but not least, we provide extensive after-sales service. For further information, please feel free to contact us. We have a large network of agents throughout the world.

Accuracy
Example:
With small segments of products and a portion size of 250 g, the normal accuracy will be ± 1-2 g* at 2S

* Depending on the tolerance set point and the nature of the products

Type of weighing
- Single or multiple weighing
- Flow dump weighing
- Weighing with floating set point
- Single Dynamic Weighing (SDW)
- Dual Dynamic Weighing (DDW)
- Mix weighing

Cabinplant A/S
Roesbjergvej 9
DK-5683 Haarby
Denmark

Tel.: +45 6373 2020
Fax: +45 6373 2000
E-mail: cpi@cabinplant.com

www.cabinplant.com

Cabinplant
Precise by nature